Grated waste 1 1/4" - Brushed Platinum

IMO

10 110 970 Product version from 10/1/2023

Fits: IMO, LULU, MADISON, MEM, TARA, CL.1, LISSÉ, VAIA, META, CYO

Brushed Platinum	10 110 970-06
Chrome	10 110 970-00
Platinum	10 110 970-08
Durabrass (23kt Gold)	10 110 970-09
Dark Chrome	10 110 970-19
Light Gold	10 110 970-26
Brushed Light Gold	10 110 970-27
Brushed Durabrass (23kt Gold)	10 110 970-28
Matte Black	10 110 970-33
Brushed Bronze	10 110 970-42
Brushed Champagne (22kt Gold)	10 110 970-46
Champagne (22kt Gold)	10 110 970-47
Brushed Chrome	10 110 970-93
Brushed Dark Platinum	10 110 970-99

We reserve the right to change designs, product range and technical specifications without prior notice.
More information can be found at: www.dornbracht.com +49 (0) 2371 8899 900 mail@dornbracht.com

Grated waste 1 1/4" - Brushed Platinum

IMO

10 110 970 Product version from 10/1/2023

Only suitable for sinks without an overflow.

Grated waste 1 1/4" - Brushed Platinum

IMO

10 110 970 Product version from 10/1/2023

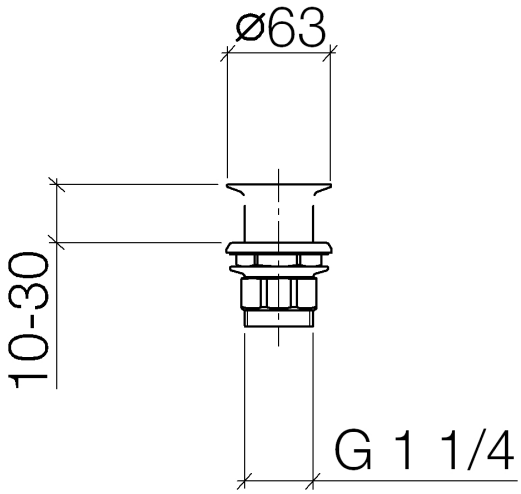

Grated waste 1 1/4" - Brushed Platinum

IMO

10 110 970 Product version from 10/1/2023

Parts for other finishes can be found here: Chrome

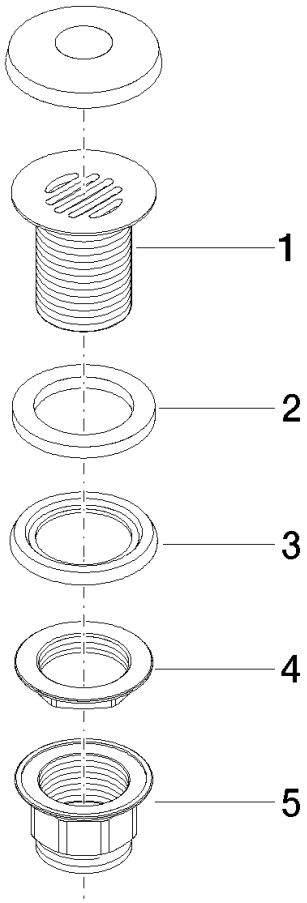

Spare parts list

No.	Item Number	Name	Quantity used	Delivery time
1	09 11 01 025-06	cup	1	10
2	09 14 05 039 90	seal	1	2
3	09 14 03 025 90	seal	1	2
4	09 23 10 017 90	nut	1	2
5	09 23 10 020-06	nut	1	10

We reserve the right to change designs, product range and technical specifications without prior notice.
More information can be found at: www.dornbracht.com +49 (0) 2371 8899 900 mail@dornbracht.com